MULTIPLEX COMMUNICATION SYSTEM (LHD)

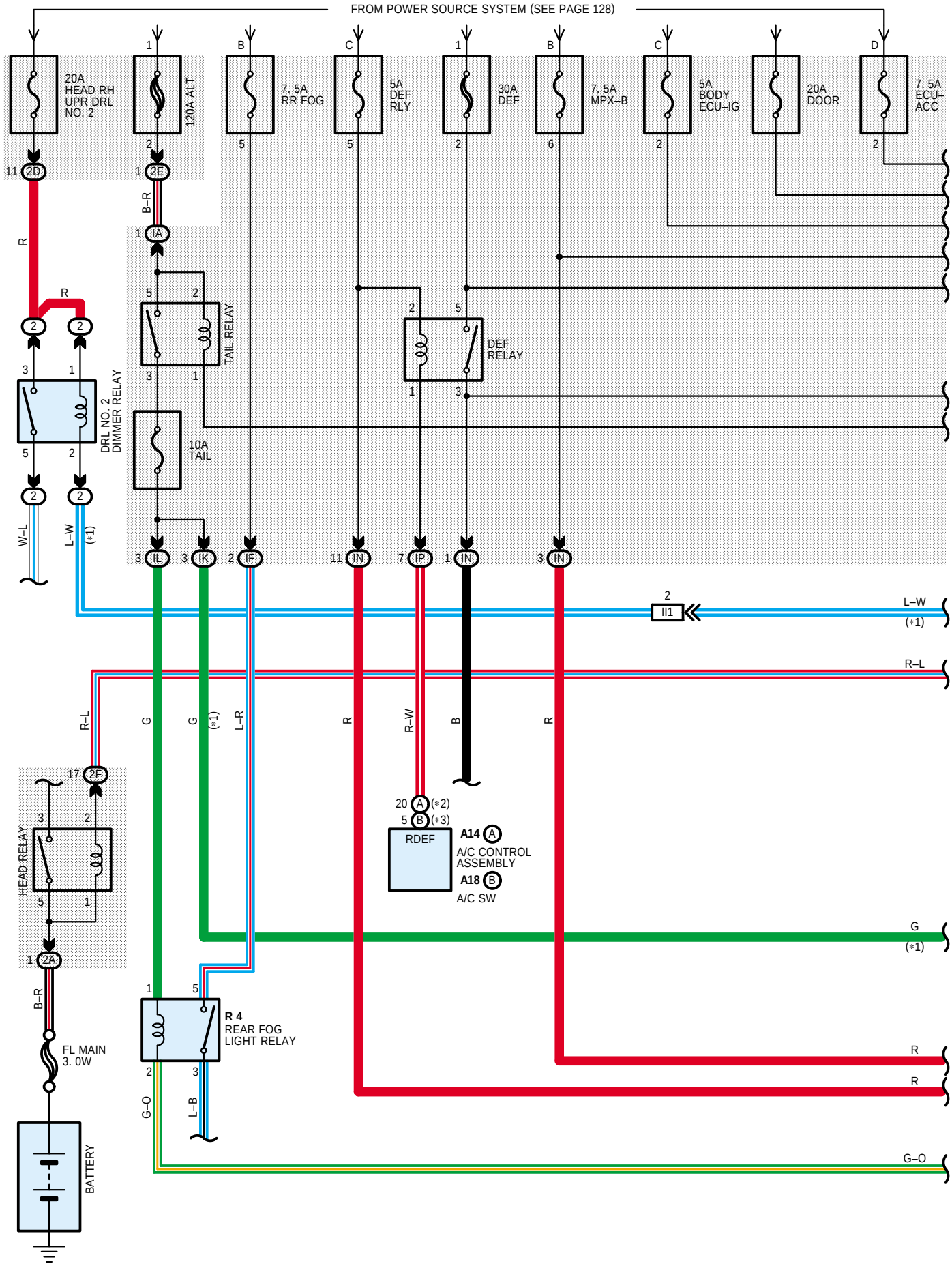

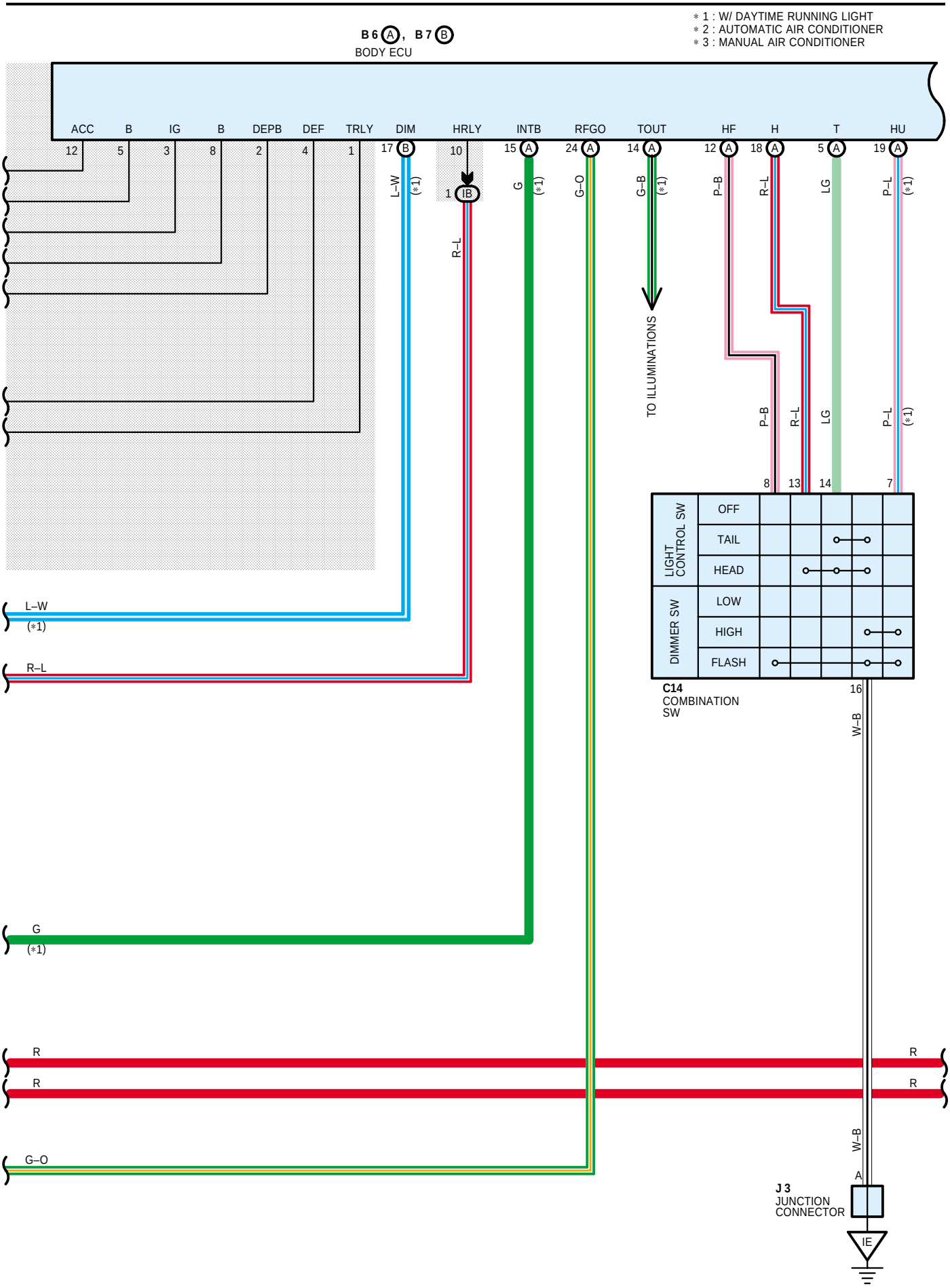
* 1 : W/ DAYTIME RUNNING LIGHT
* 2 : AUTOMATIC AIR CONDITIONER
* 3 : MANUAL AIR CONDITIONER
B6 A, B7 B
BODY ECU
ACC
B
IG
B
DEPB
DEF
TRLY
DIM
HRLY
INTB
RFGO
TOUT
HF
H
T
HU
TO ILLUMINATIONS
LIGHT CONTROL SW
OFF
TAIL
HEAD
DIMMER SW
LOW
HIGH
FLASH
C14
COMBINATION SW
J3
JUNCTION CONNECTOR
IE
L–W
R–L
G
G–O
G–B
P–B
LG
P–L
W–B
R

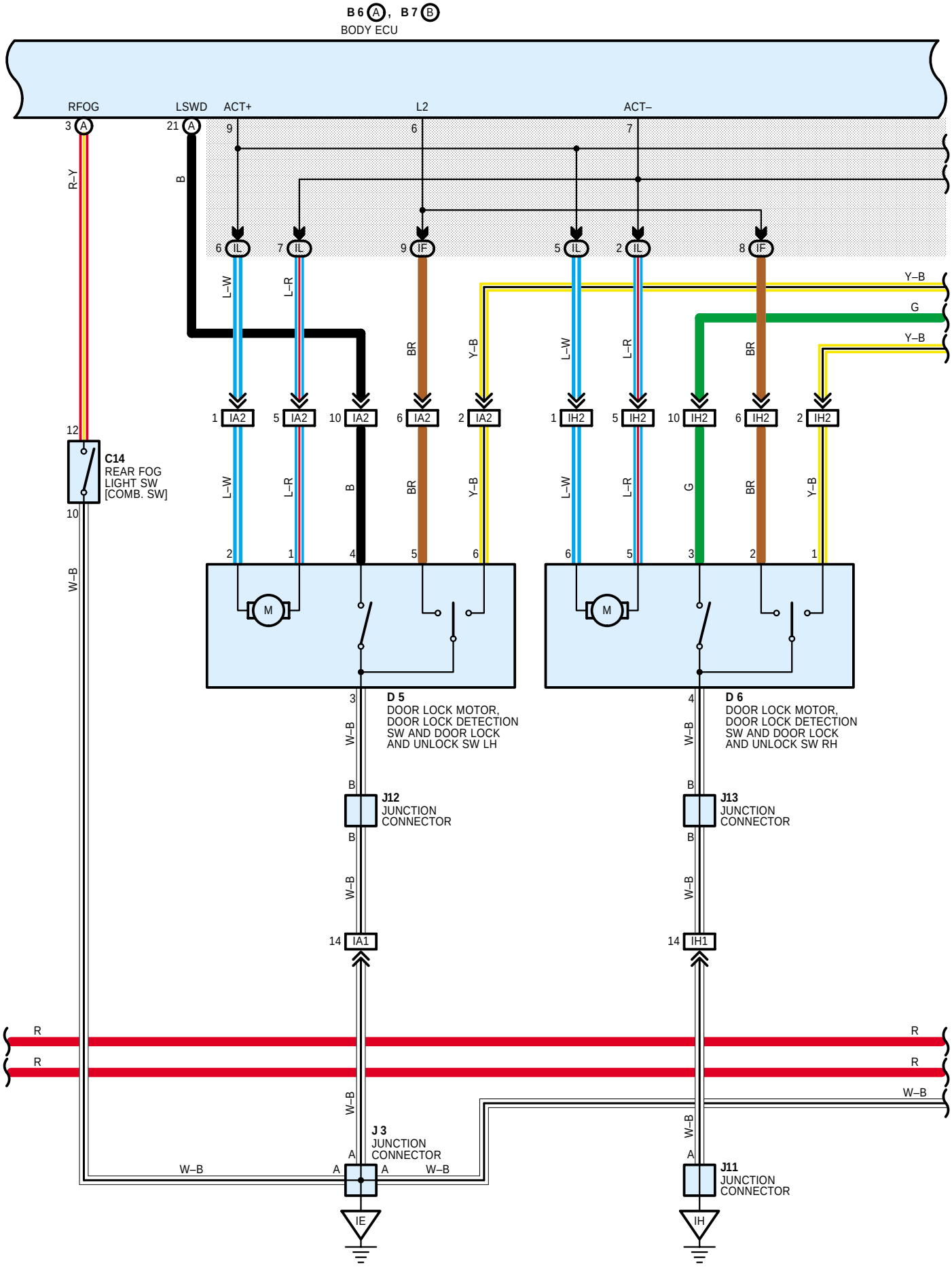
B6 (A), B7 (B)
BODY ECU
RFOG
LSWD
ACT+
L2
ACT–
C14
REAR FOG
LIGHT SW
[COMB. SW]
D 5
DOOR LOCK MOTOR,
DOOR LOCK DETECTION
SW AND DOOR LOCK
AND UNLOCK SW LH
D 6
DOOR LOCK MOTOR,
DOOR LOCK DETECTION
SW AND DOOR LOCK
AND UNLOCK SW RH
J12
JUNCTION
CONNECTOR
J13
JUNCTION
CONNECTOR
J 3
JUNCTION
CONNECTOR
J11
JUNCTION
CONNECTOR
IE
IH

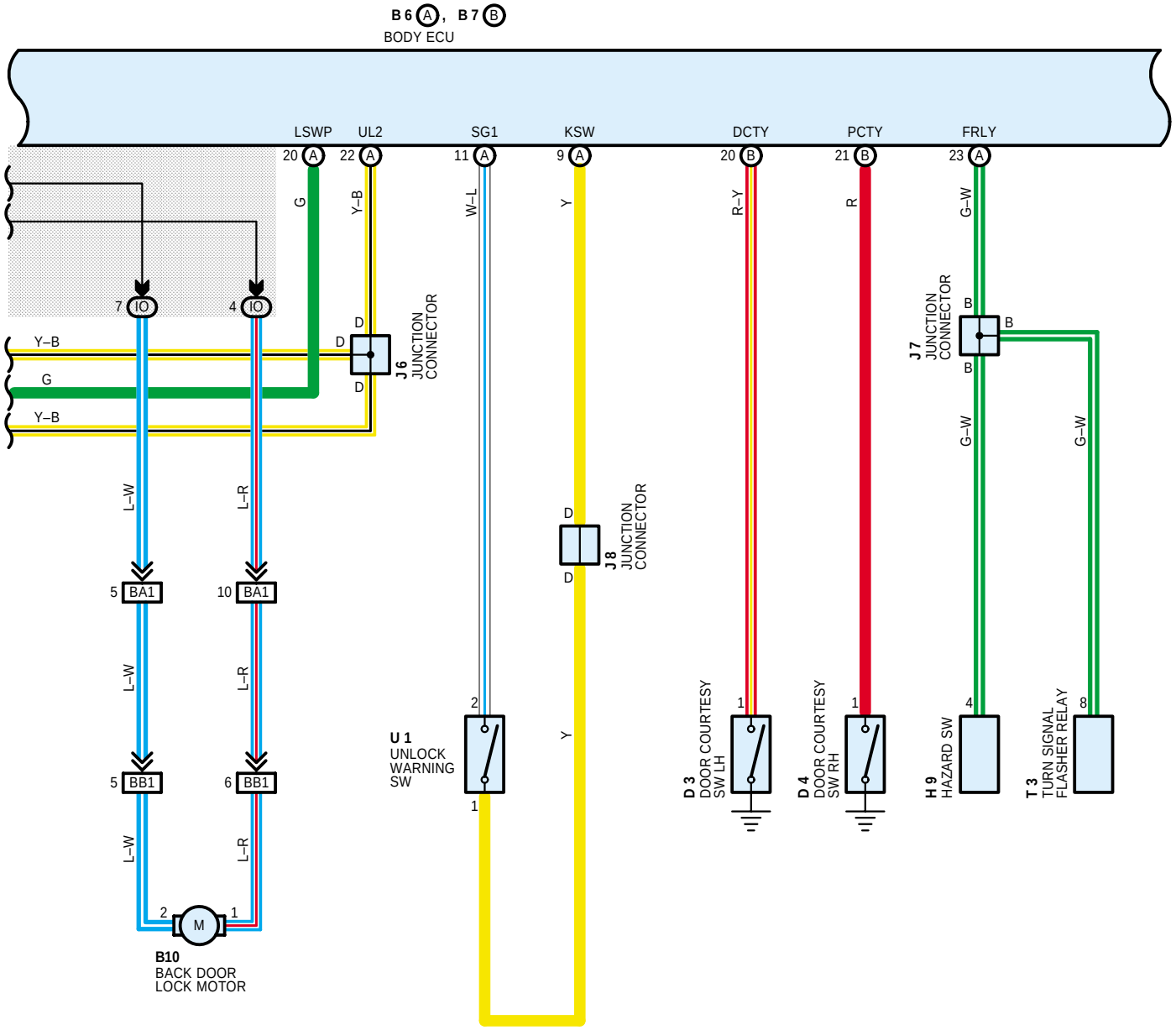
B6 A, B7 B
BODY ECU
LSWP
UL2
SG1
KSW
DCTY
PCTY
FRLY
20 A
22 A
11 A
9 A
20 B
21 B
23 A
G
Y–B
W–L
Y
R–Y
R
G–W
7 IO
4 IO
D
J6 JUNCTION CONNECTOR
J7 JUNCTION CONNECTOR
B
L–W
L–R
5 BA1
10 BA1
5 BB1
6 BB1
J8 JUNCTION CONNECTOR
U1 UNLOCK WARNING SW
D3 DOOR COURTESY SW LH
D4 DOOR COURTESY SW RH
H9 HAZARD SW
T3 TURN SIGNAL FLASHER RELAY
M
B10 BACK DOOR LOCK MOTOR

R
R
W–B

MULTIPLEX COMMUNICATION SYSTEM (LHD)

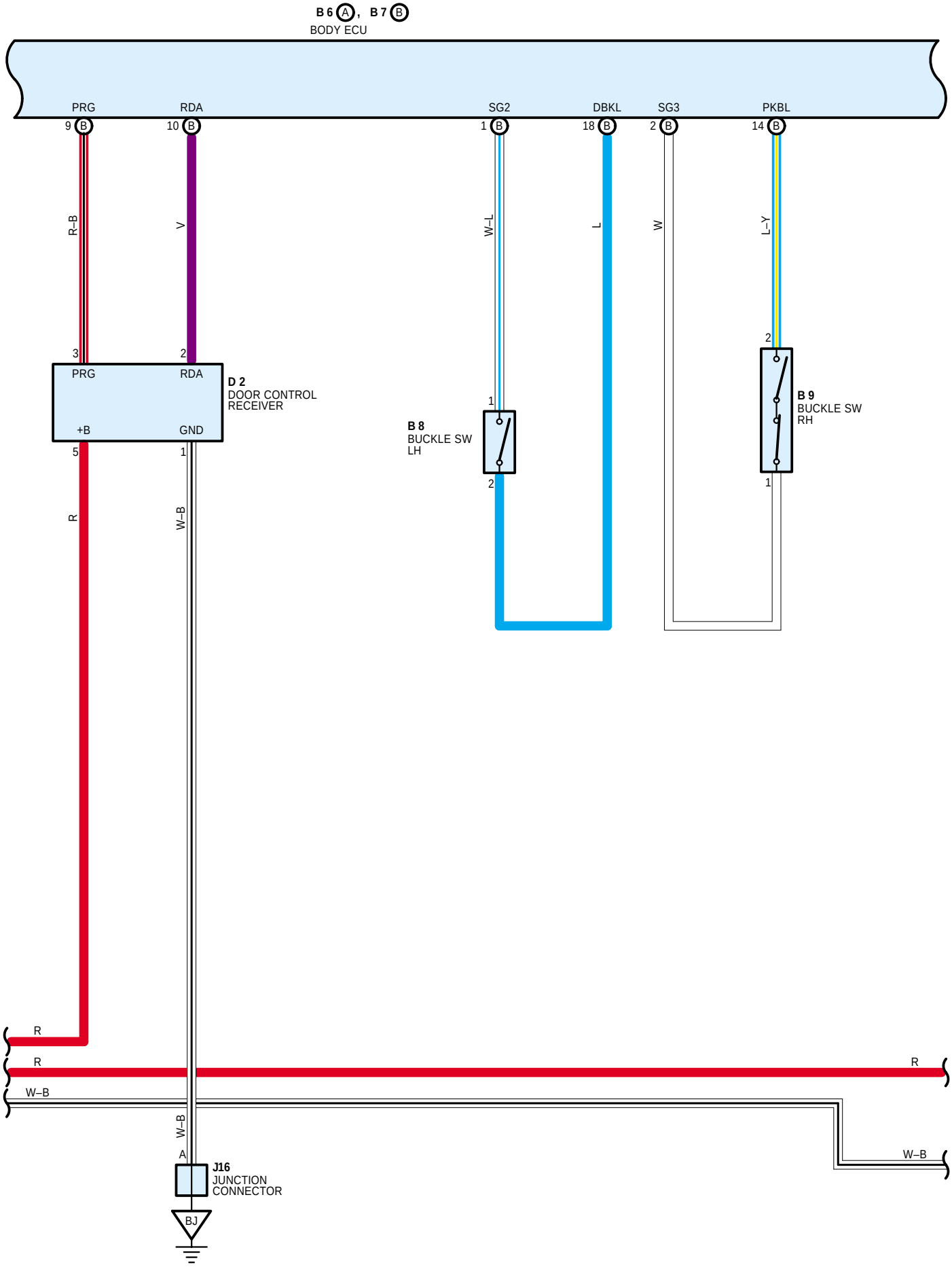

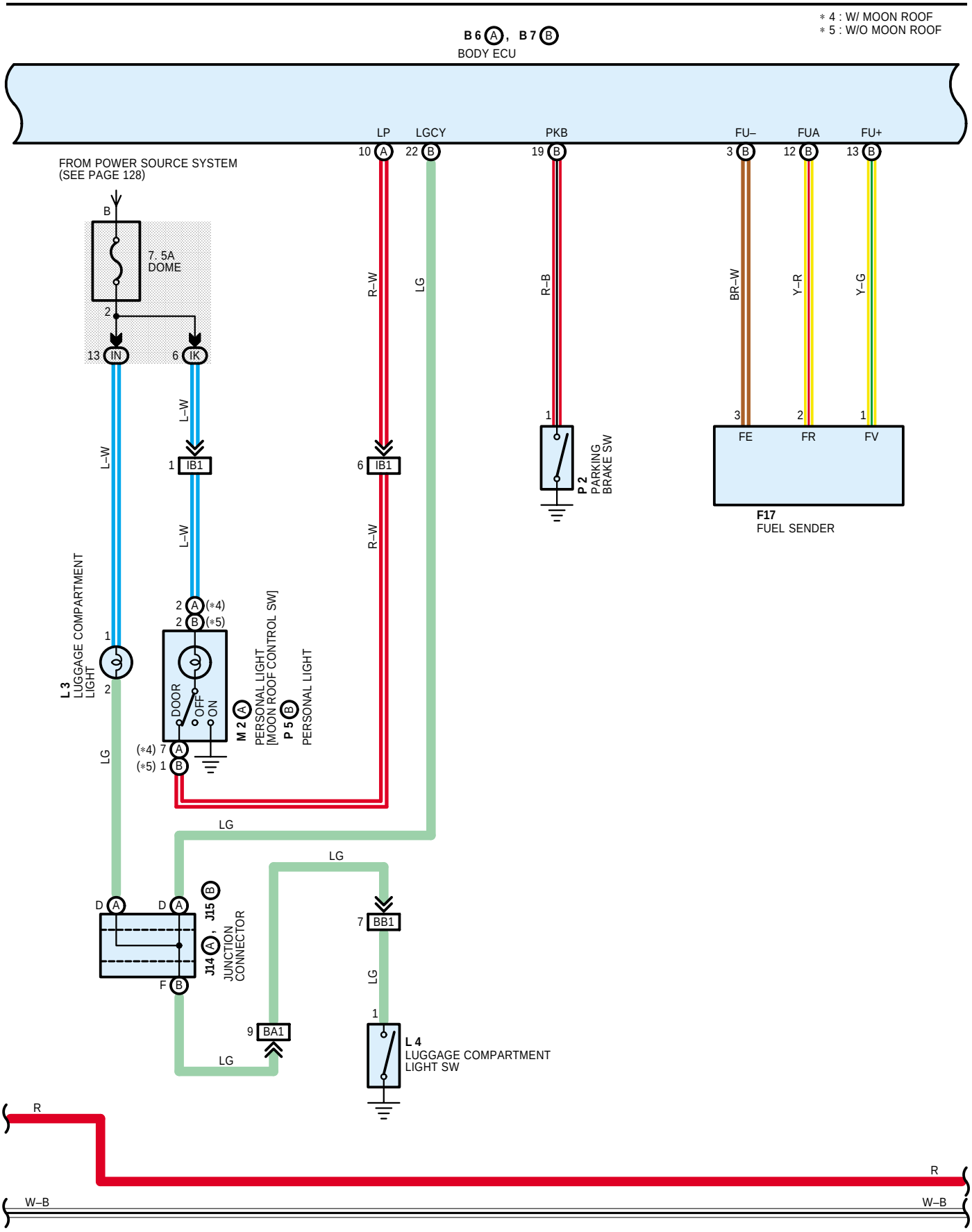
* 4 : W/ MOON ROOF
* 5 : W/O MOON ROOF
B 6 A , B 7 B
BODY ECU
LP
LGCY
PKB
FU–
FUA
FU+
10 A
22 B
19 B
3 B
12 B
13 B
FROM POWER SOURCE SYSTEM
(SEE PAGE 128)
B
7. 5A
DOME
2
13 IN
6 IK
R–W
LG
R–B
BR–W
Y–R
Y–G
L–W
1 IB1
6 IB1
1
P 2
PARKING
BRAKE SW
3
2
1
FE
FR
FV
F17
FUEL SENDER
L 3
LUGGAGE COMPARTMENT
LIGHT
2 A (*4)
2 B (*5)
DOOR
OFF
ON
M 2 A
PERSONAL LIGHT
[MOON ROOF CONTROL SW]
P 5 B
PERSONAL LIGHT
(*4) 7 A
(*5) 1 B
D A
D A
J15 B
J14 A ,
JUNCTION
CONNECTOR
F B
7 BB1
9 BA1
L 4
LUGGAGE COMPARTMENT
LIGHT SW
R
W–B

MULTIPLEX COMMUNICATION SYSTEM (LHD)

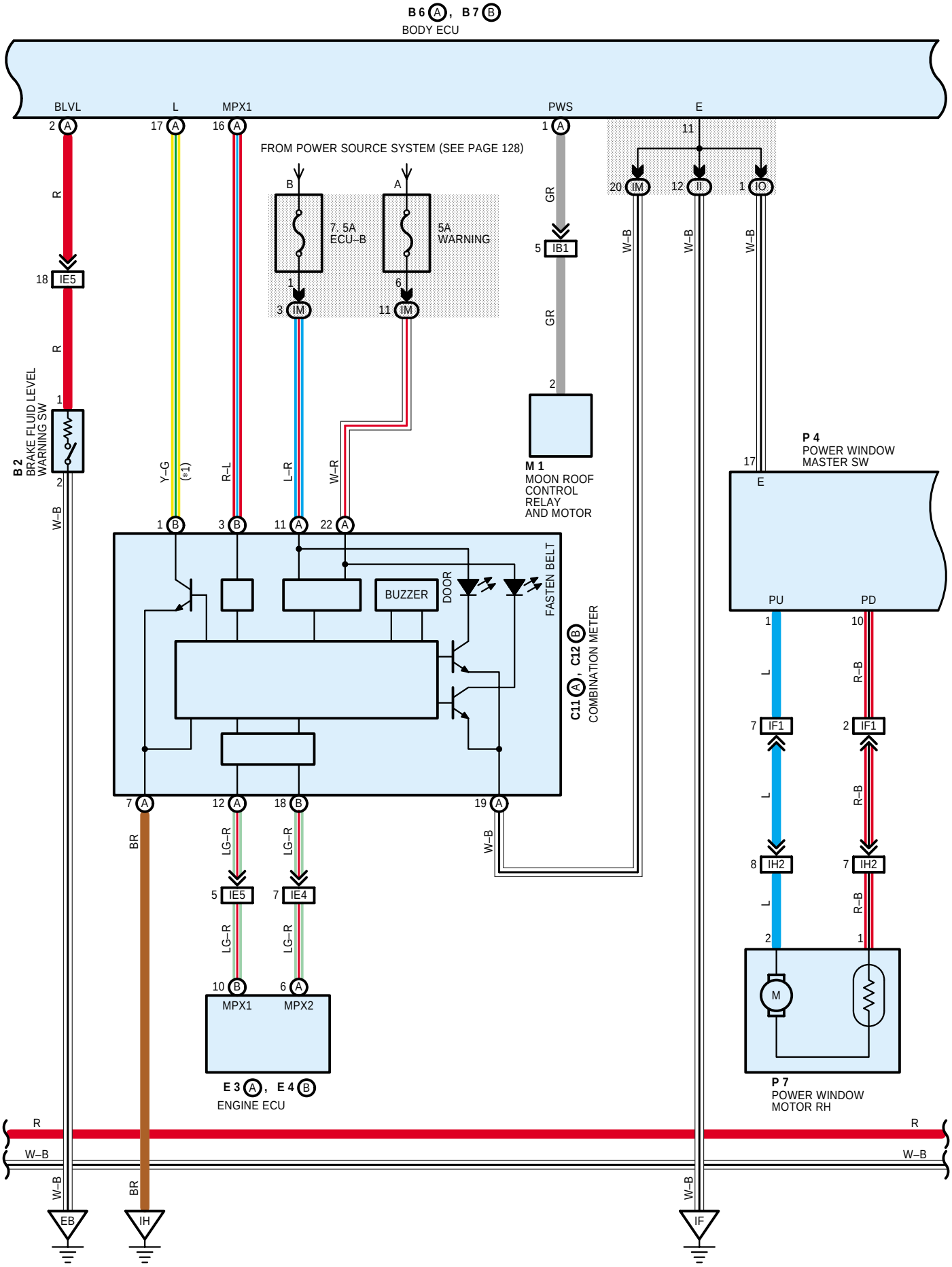

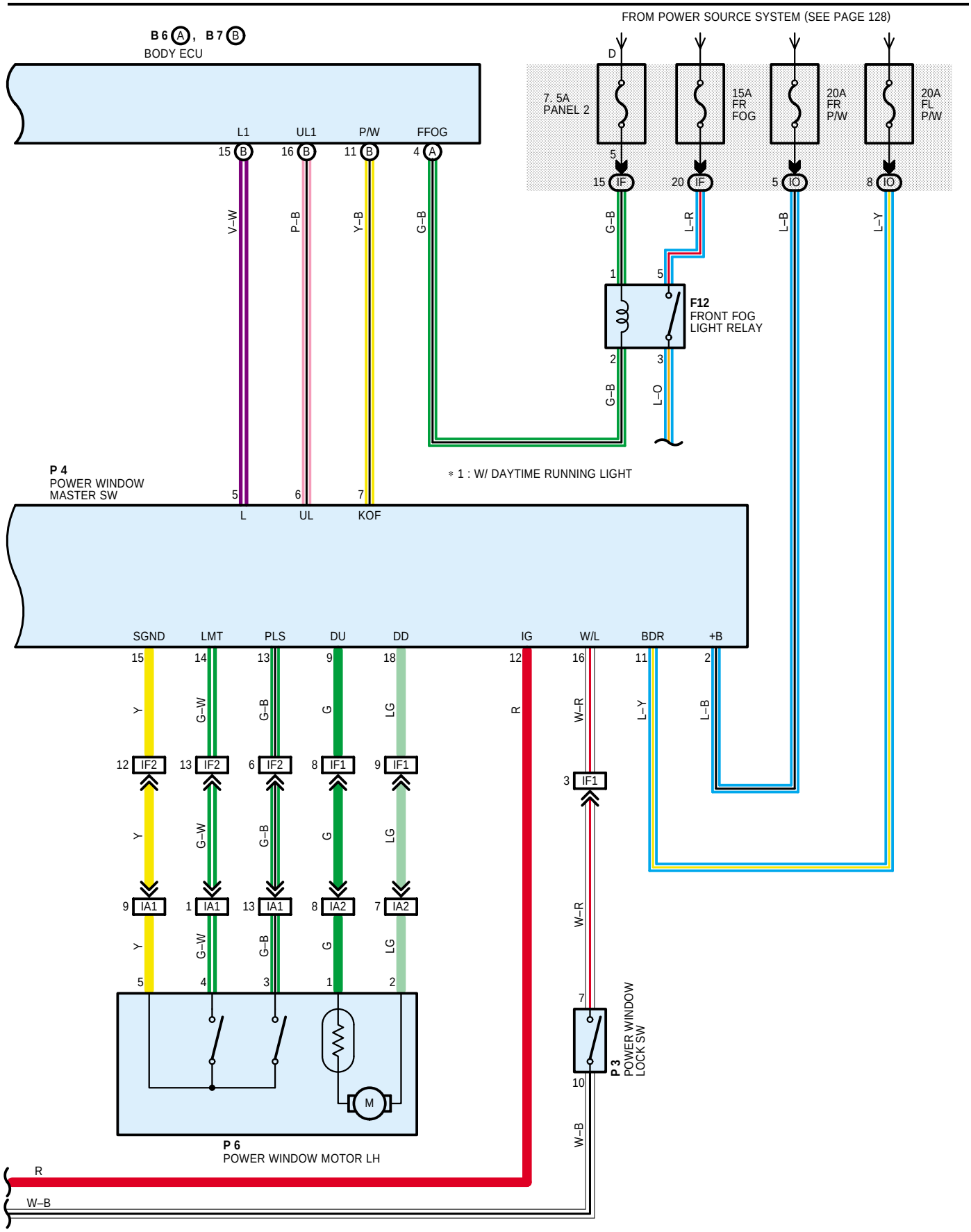
FROM POWER SOURCE SYSTEM (SEE PAGE 128)
B 6 A, B 7 B
BODY ECU
L1
UL1
P/W
FFOG
7. 5A
PANEL 2
15A
FR
FOG
20A
FR
P/W
20A
FL
P/W
F12
FRONT FOG
LIGHT RELAY
* 1 : W/ DAYTIME RUNNING LIGHT
P 4
POWER WINDOW
MASTER SW
L
UL
KOF
SGND
LMT
PLS
DU
DD
IG
W/L
BDR
+B
IF2
IF1
IA1
IA2
M
P 6
POWER WINDOW MOTOR LH
P 3
POWER WINDOW
LOCK SW
R
W–B